Performance Modelling — Traffic Equation Exercise

Jane Hillston
School of Informatics
The University of Edinburgh
Scotland

6th February 2017

Exercise

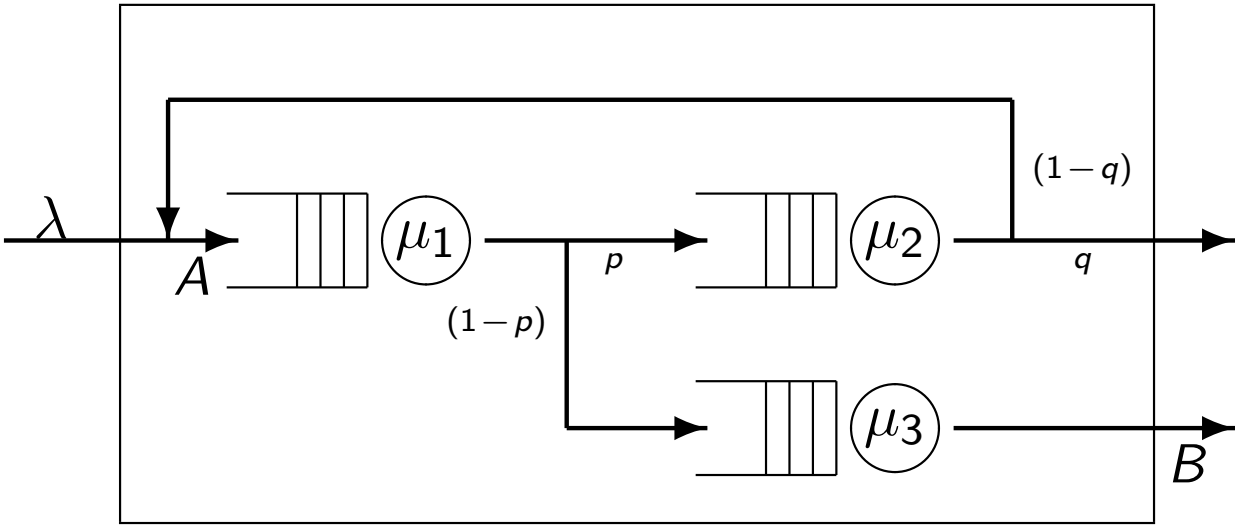

1. Write down the traffic equations for the network.
2. If the value of λ is 9, $p = 0.2$ and $q = 0.5$, what is the effective arrival rate at point A?
3. Using the same values, what is the rate of external departures at point B in the network? Explain your reasoning.
4. If the service rate at service centre 1 is $\mu_1 = 20$, what is the probability that this queue is empty but the server is not idle? Explain your reasoning.

Exercise

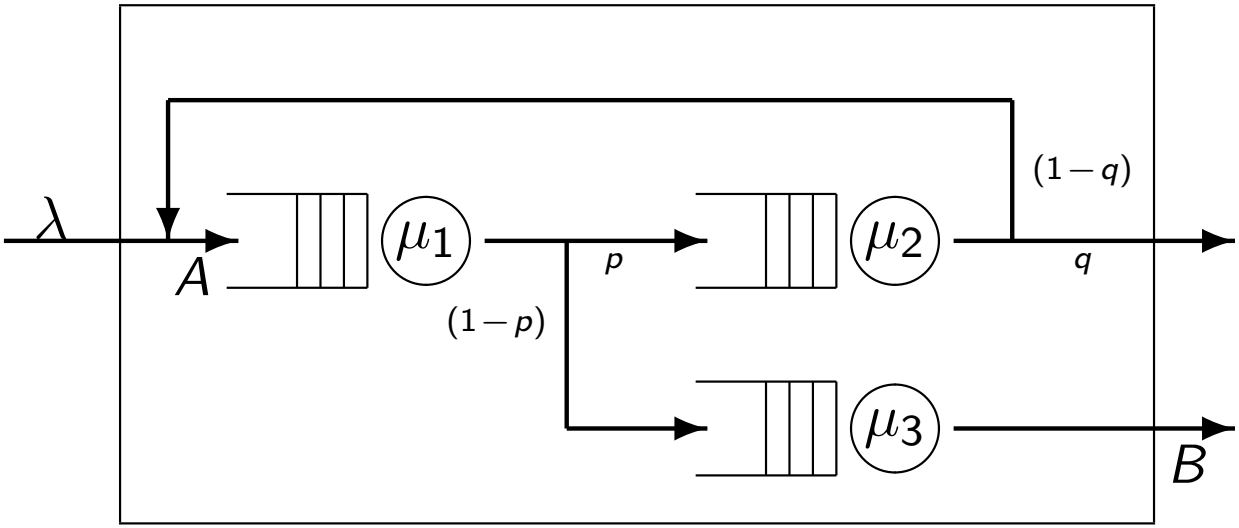

The traffic equations for the network are:

$$\lambda_1 = \lambda + (1-q)\lambda_2 \quad (1)$$

$$\lambda_2 = p\lambda_1 \quad (2)$$

$$\lambda_3 = (1-p)\lambda_1 \quad (3)$$

Exercise

The traffic equations for the network are:

$$\begin{aligned} \lambda_1 &= \lambda + (1-q)\lambda_2 && (1) \\ \lambda_2 &= p\lambda_1 && (2) \\ \lambda_3 &= (1-p)\lambda_1 && (3) \end{aligned}$$

To find the effective arrival rate at A we need to substitute (2) into (1)

$$\lambda_1 = \lambda/(1-p+pq)$$

and substitute in the values giving $\lambda_1 = 9/0.9 = 10$
So the effective arrival rate at point A is 10.

Exercise

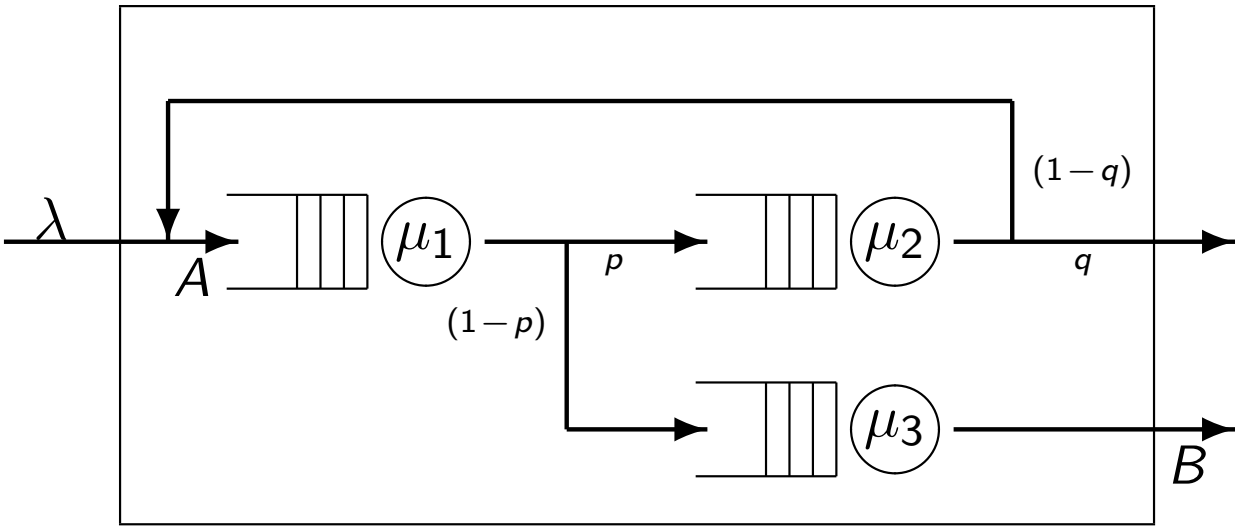

The external departures at point B are all the departures from service centre 3 and this will have the same rate as the effective arrival rate, λ_3.
From (3) $\lambda_3 = (1-p)\lambda_1 = 0.8 \times 10 = 8$.
So external departures at point B have rate 8.

Exercise

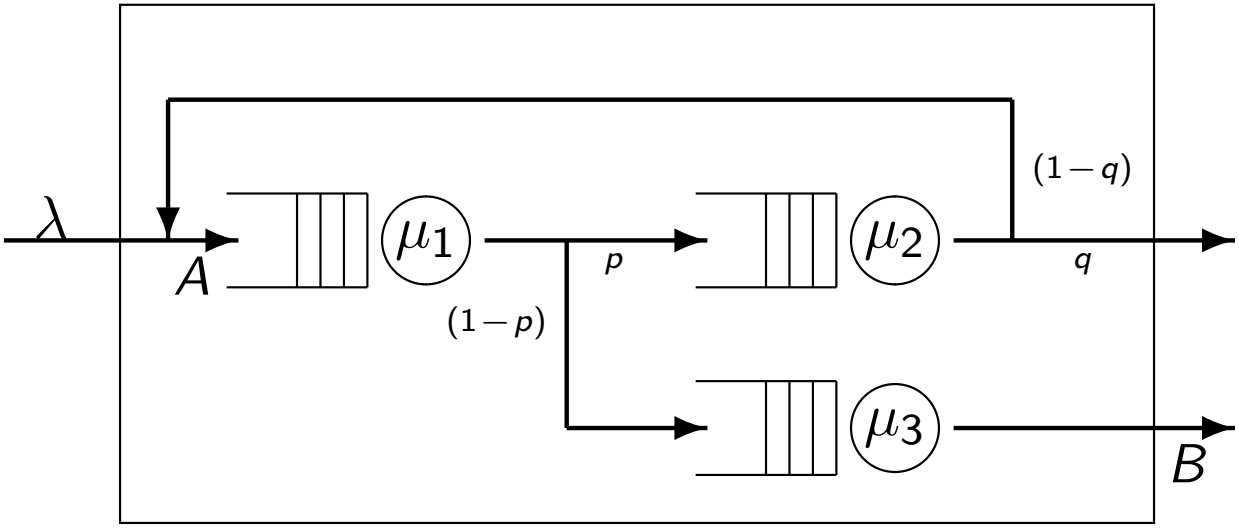

Service rate at service centre 1 is $\mu_1 = 20$, implies $\rho_1 = 10/20 = 1/2$. This is a product form network so the queues behave as if independent i.e. we consider service centre 1 alone. "*The queue is empty but the server is not idle*" is true iff there is exactly one customer in the queue, i.e. $\pi_1(1)$. This is an $M/M/1$ queue so this can be expressed as $\rho(1-\rho)$. Substituting in the value for ρ_1 we get 0.25.